Warsaw Judo Open 2013-09-28/9 Torwar U14W-44

Competitors: 11

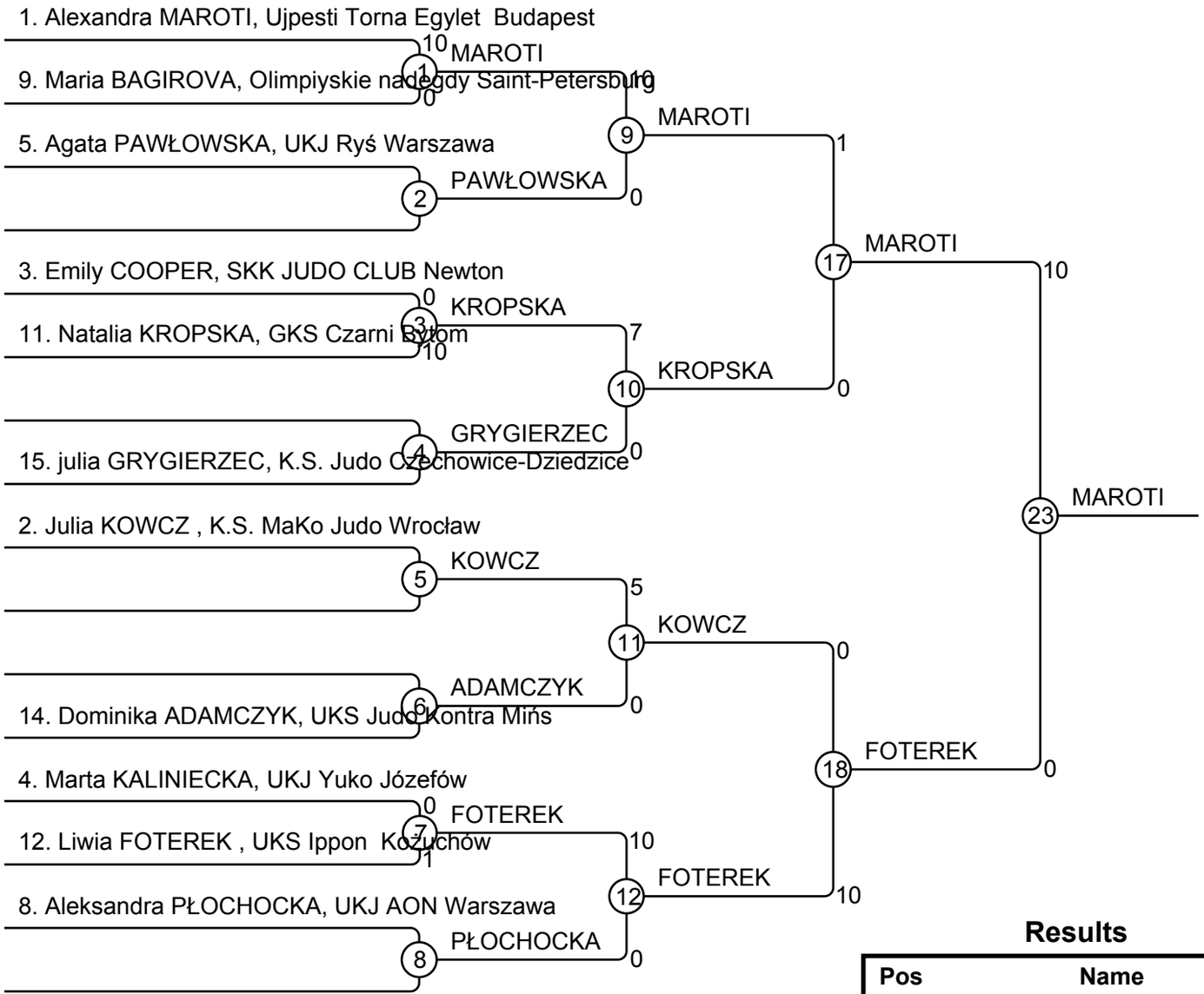

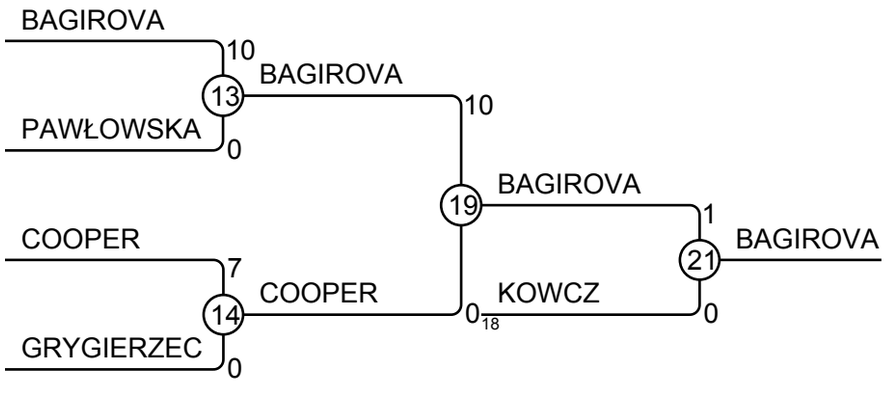

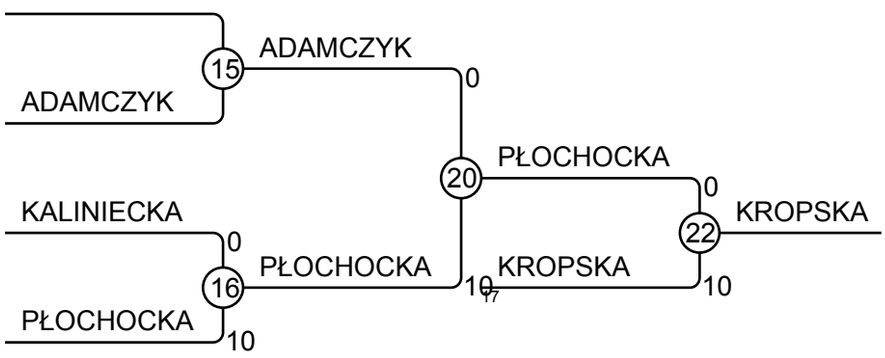

Results

Pos	Name
1	Alexandra MAROTI, Ujpesti Torna Eg
2	Liwia FOTEREK , UKS Ippon Kożuch
3	Maria BAGIROVA, Olimpiyskie nadeg
3	Natalia KROPSKA, GKS Czarni Byto
5	Julia KOWCZ , K.S. MaKo Judo Wroc
5	Aleksandra PŁOCHOCKA, UKJ AON
7	Emily COOPER, SKK JUDO CLUB N
7	Dominika ADAMCZYK, UKS Judo Ko